Label by laser engrave.

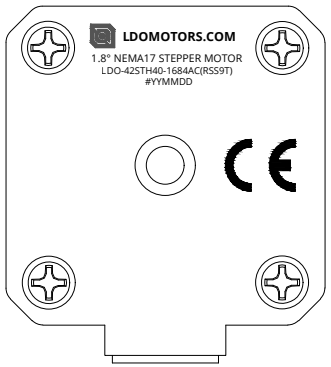

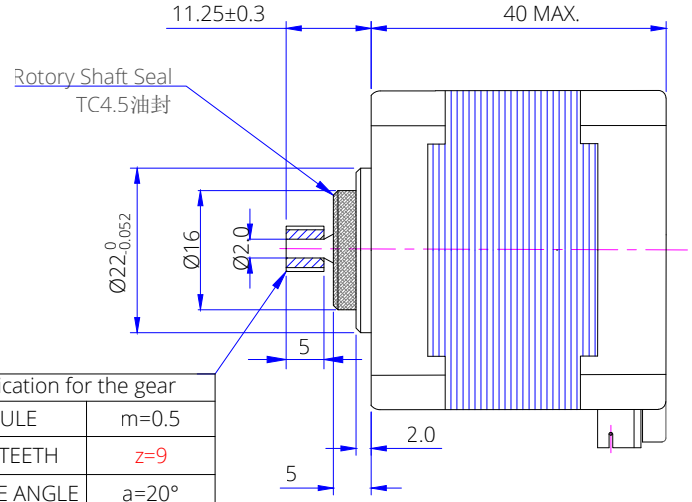

Specification for the gear	
MODULE	m=0.5
NO.OF TEETH	z=9
PRESSURE ANGLE	a=20°
PITCH DIA.	d=4.5
OUTSIDE DIA.	da=5.5
MATERIAL	Brass

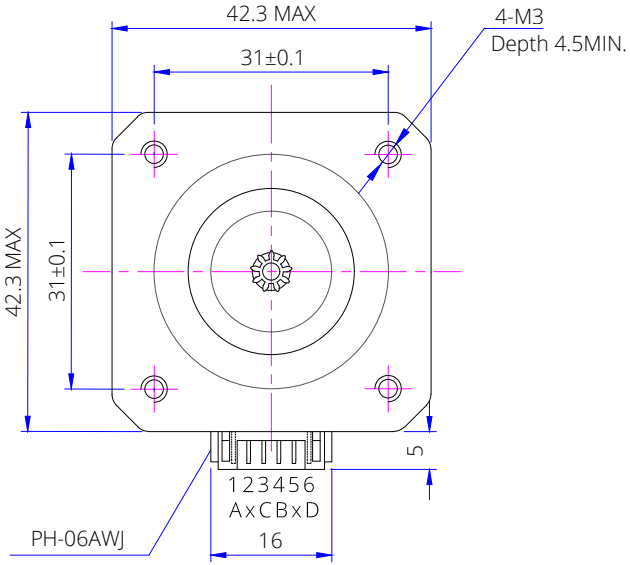

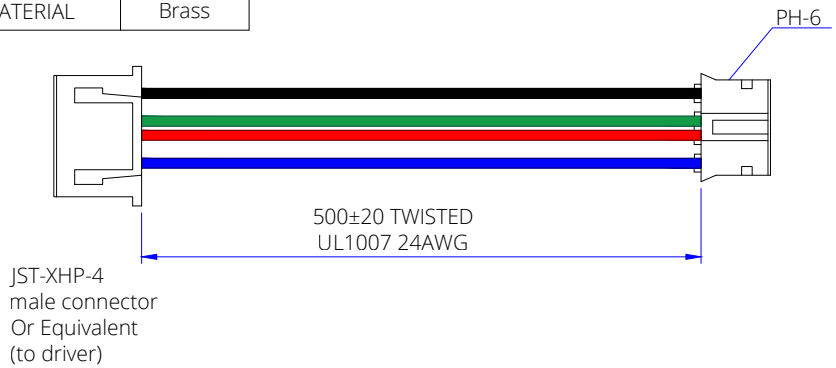

Diagram

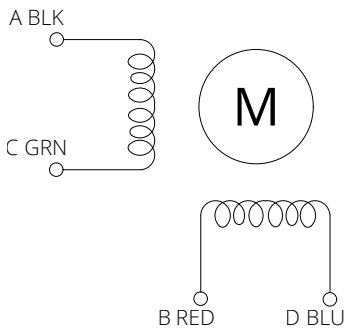

Item	Specification	Item	Specification
Phase Number	2	Step Angle	1.8° ± 5%
Rated Voltage	DC 2.8V / Phase	Rated Current	DC 1.68A / Phase
Phase Resistance	1.65x(1±20%) Ω	Phase Inductance	3.6x(1±20%) mH
Holding Torque	4.5 Kgf-cm(0.45Nm) MIN	Detent Torque	30 mN-m MIN.
Rotation Direction	ACBDA CW	Insulation Resistance	100Mohm(DC500V)
HI-POT	AC600V/1mA/1S	Insulation Class	Class B 130°C
Rotor Inertia	53 g-cm² REF	Weight	0.28 Kg REF

REV.	ECN NO.	DESCRIPTION	MADE BY	APPR. BY	DATE
A	----	NEW RELEASE	Xu SD	J.B.	1/25/24

VIEW

SCALE NA

LDO Motors Co., Ltd.

Part NO.

1.8° NEMA17 Stepper Motor
LDO-42STH40-1684AC(RSS9T)

DRAWN BY	CHECKED BY	APPR. BY	DATE	FACTORY CODE	SHEET NO.
WangJH	J.B.	J.B.	10/3/23		1/1